ENGINE AND EMISSION CONTROL

CONTENTS

ENGINE CONTROL SYSTEM 3

GENERAL INFORMATION 3

SERVICE SPECIFICATION 3

ON-VEHICLE SERVICE 3

Accelerator Cable Check and Adjustment <MPI> 3

ACCELERATOR CABLE AND PEDAL 4

EMISSION CONTROL SYSTEM <GDI> 6

GENERAL INFORMATION 6

Emission Control Device Reference Table 6

SERVICE SPECIFICATIONS 7

SPECIAL TOOL 7

VACUUM HOSE 7

Vacuum Hose Piping Diagram 7

Vacuum Circuit Diagram 8

Vacuum Hose Check 8

Vacuum Hose Installation 8

CRANKCASE EMISSION CONTROL SYSTEM 9

General Information 9

System Diagram 9

Component Location 9

Positive Crankcase Ventilation System Check 10

PCV Valve Check 10

EVAPORATIVE EMISSION CONTROL SYSTEM 11

General Information 11

System Diagram 11

Component Location 11

Purge Control System Check 12

Purge Port Vacuum Check 12

Purge Control Solenoid Valve Check 13

CONTINUED ON NEXT PAGE

EXHAUST GAS RECIRCULATION (EGR) SYSTEM 14
General Information 14
Operation 14
System Diagram 14
Component Location 14
Exhaust Gas Recirculation (EGR) Control System Check 15
EGR Valve (Stepper Motor) Check 15

EGR VALVE 17

CATALYTIC CONVERTER 18

EMISSION CONTROL SYSTEM <MPI> 19

GENERAL INFORMATION 19
Emission Control Device Reference Table 19

SERVICE SPECIFICATIONS 20

VACUUM HOSE 20
Vacuum Hose Piping Diagram 20
Vacuum Circuit Diagram 22
Vacuum Hose Check 23
Vacuum Hose Installation 23

CRANKCASE EMISSION CONTROL SYSTEM 24
General Information 24
System Diagram 24
Component Location 24
Positive Crankcase Ventilation System Check 24
PCV Valve Check 24

EVAPORATIVE EMISSION CONTROL SYSTEM <Vehicles with catalytic converter> 25
General Information 25
System Diagram 25
Component Location 25
Purge Control System Check <4G1> 26
Purge Control System Check <4G9> 27
Purge Port Vacuum Check 27
Purge Control Solenoid Valve Check 28

EVAPORATIVE EMISSION CONTROL SYSTEM <Vehicles without catalytic converter> 29
General Information 29
Purge Port Vacuum Check 29
Check Valve Check 29

EXHAUST GAS RECIRCULATION (EGR) SYSTEM 30
General Information 30
Operation 30
System Diagram 30
Component Location 30
Exhaust Gas Recirculation (EGR) Control System Check <4G1> 31
Exhaust Gas Recirculation (EGR) Control33 System Check <4G9> 32
EGR Valve Check 32
EGR Port Vacuum Check 33
EGR Control Solenoid Valve Check 33

CATALYTIC CONVERTER 34

ENGINE CONTROL SYSTEM

GENERAL INFORMATION

For vehicles with GDI engine, electronically controlled throttle valve system, which do not use the accelerator cable, have been adopted.
For vehicles with MPI engine, a cable-type accelerator mechanism have been adopted.

A suspended-type accelerator pedal have been adopted.

SERVICE SPECIFICATION

Items	Standard value
Accelerator cable play mm	1 – 2

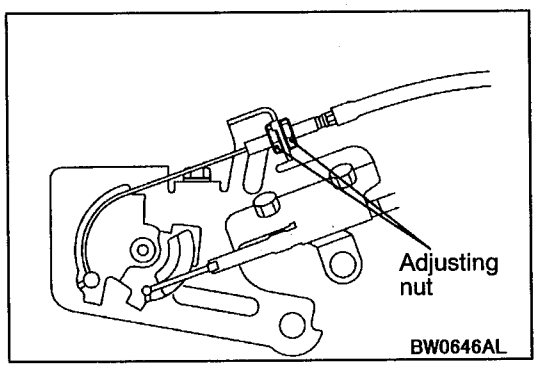

ON-VEHICLE SERVICE

ACCELERATOR CABLE CHECK AND ADJUSTMENT <MPI>

1. Check the accelerator cable play when the accelerator pedal is released.

   Standard value: 1 – 2 mm

2. If the play is not within the standard value, turn the adjusting nut to adjust the play to the standard value.

ACCELERATOR CABLE AND PEDAL

REMOVAL AND INSTALLATION

<GDI>

Post-installation Operation
- Accelerator Pedal Position Sensor Check and Adjustment (Refer to GROUP 13A – On-vehicle Service.)
- Kickdown Cable Adjustment (Refer to GROUP 23 – On-vehicle Service.)

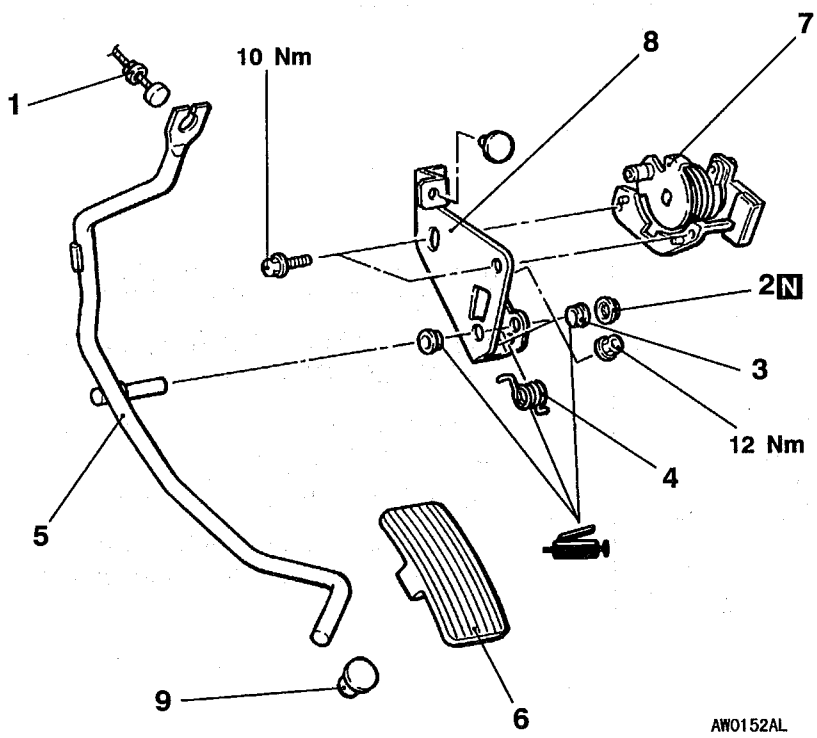

Removal steps

1. Kickdown cable connection
2. Spring nut
3. Bushing
4. Return spring
5. Accelerator pedal
6. Accelerator pedal pad
7. Accelerator pedal position sensor
8. Accelerator pedal bracket
9. Accelerator pedal stopper

<MPI>

Post-installation Operation
Accelerator Cable Adjustment (Refer to P.17-3.)

<L.H. drive vehicles>

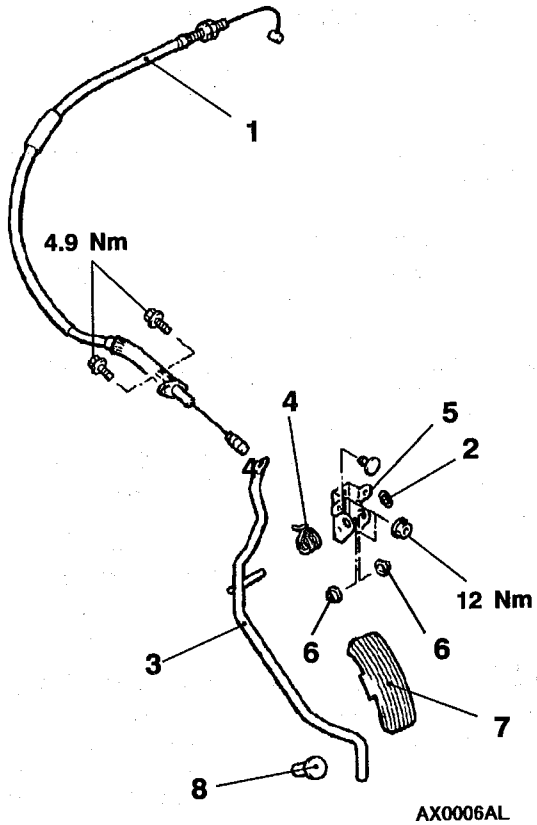

<R.H. drive vehicles>

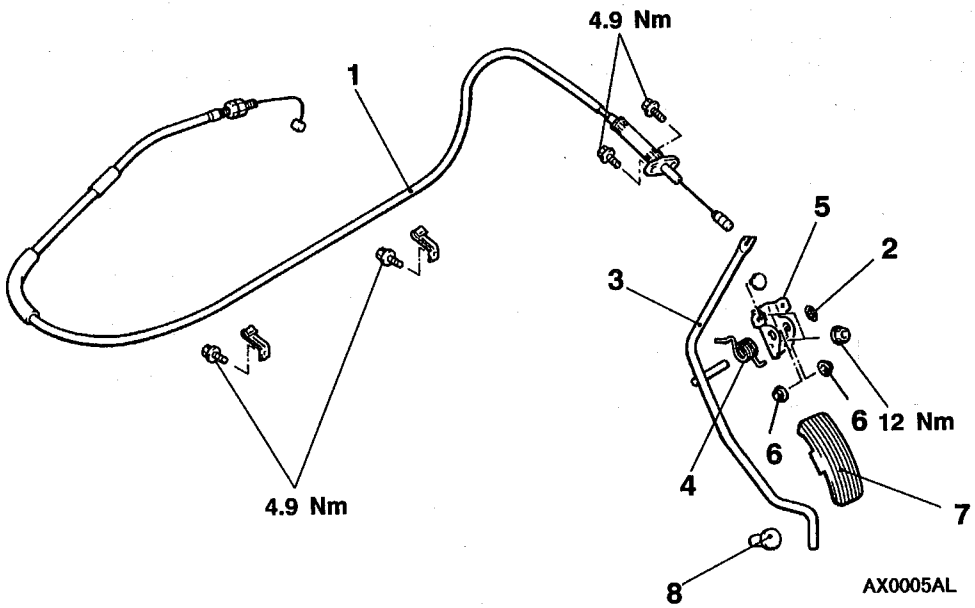

Removal steps

1. Accelerator cable
2. Push-on spring nut
3. Accelerator arm assembly
4. Spring
5. Accelerator pedal bracket
6. Bushing
7. Pedal pad
8. Accelerator pedal stopper

EMISSION CONTROL SYSTEM <GDI>

GENERAL INFORMATION

The emission control system consists of the following subsystems:
- Crankcase emission control system
- Evaporative emission control system
- Exhaust emission control system

Items	Name	Specification
Crankcase emission control system	Positive crankcase ventilation (PCV) valve	Variable flow type (Purpose: HC reduction)
Evaporative emission control system	Canister Purge control solenoid valve	Equipped Duty cycle type solenoid valve (Purpose: HC reduction)
Exhaust emission control system	Air-fuel ratio control device–GDI system	Oxygen sensor feedback type (Purpose: CO, HC, NOx reduction)
	Exhaust gas recirculation system • EGR valve	Equipped Stepper motor type (Purpose: NOx reduction)
	Catalytic converter	Monolith type (Purpose: CO, HC, NOx reduction)

EMISSION CONTROL DEVICE REFERENCE TABLE

Related parts	Crankcase emission control system	Evaporative emission control system	Air/fuel ratio control system	Catalytic converter	Exhaust gas recirculation system	Reference page
PCV valve	×					17-10
Purge control solenoid valve		×				17-13
GDI system component		×	×			GROUP 13A
Catalytic converter				×		17-18
EGR valve					×	17-15

SERVICE SPECIFICATIONS

Items	Standard value
Purge control solenoid valve coil resistance (at 20°C) Ω	36 – 44
EGR valve (stepper motor) coil resistance (at 20°C) Ω	10 – 20

SPECIAL TOOL

Tool	Number	Name	Use
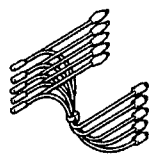 B991658	MB991658	Test harness set	Inspection of EGR valve

VACUUM HOSE

VACUUM HOSE PIPING DIAGRAM

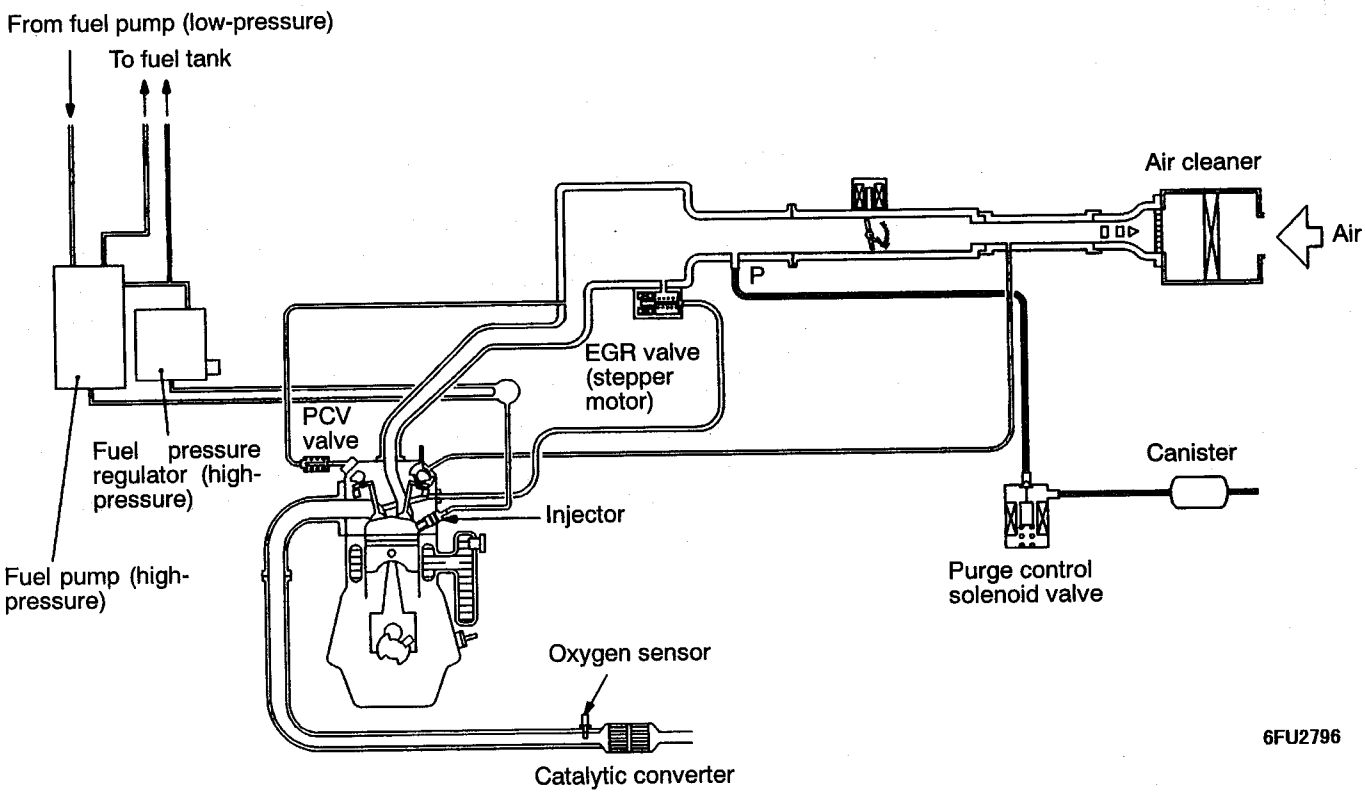

VACUUM CIRCUIT DIAGRAM

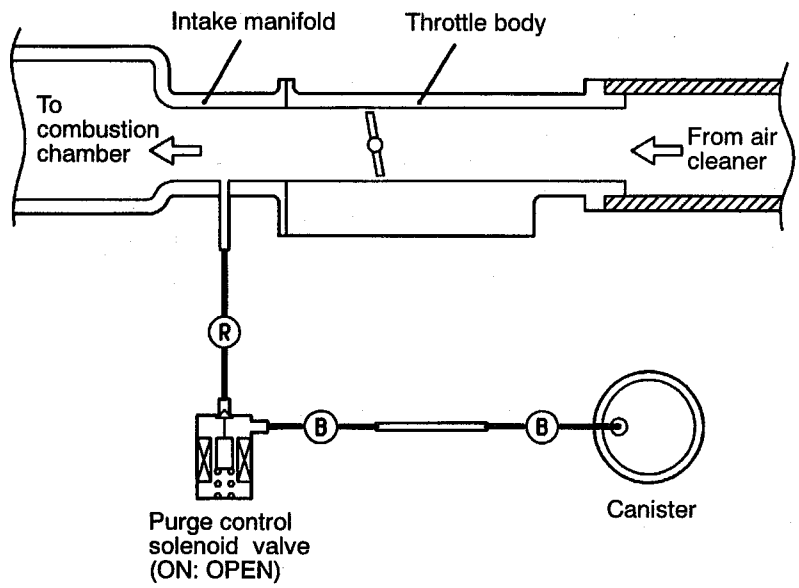

Vacuum hose colour
B: Black
R: Red

W6048AE

VACUUM HOSE CHECK

1. Using the piping diagram as a guide, check to be sure that the vacuum hoses are correctly connected.
2. Check the connection condition of the vacuum hoses, (removed, loose, etc.) and check to be sure that there are no bends or damage.

VACUUM HOSE INSTALLATION

1. When connecting the vacuum hoses, they should be securely inserted onto the nipples.
2. Connect the hoses correctly, using the vacuum hose piping diagram as a guide.

CRANKCASE EMISSION CONTROL SYSTEM

GENERAL INFORMATION

The crankcase emission control system prevents blow-by gases from escaping inside the crankcase into the atmosphere.
Fresh air is sent from the air cleaner into the crankcase through the breather hose. The air becomes mixed with the blow-by gases inside the crankcase.
The blow-by gas inside the crankcase is drawn into the intake manifold through the positive crankcase ventilation (PCV) valve.

The PCV valve lifts the plunger according to the intake manifold vacuum so as to regulate the flow of blow-by gas properly. In other words, the blow-by gas flow is regulated during low load engine operation to maintain engine stability, while the flow is increased during high load operation to improve the ventilation performance.

SYSTEM DIAGRAM

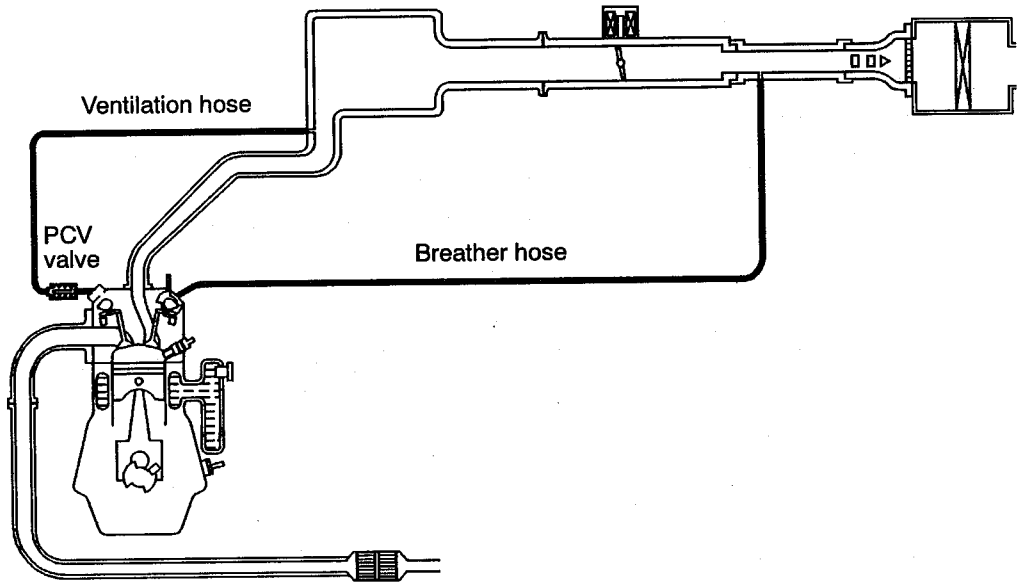

6EM0678

COMPONENT LOCATION

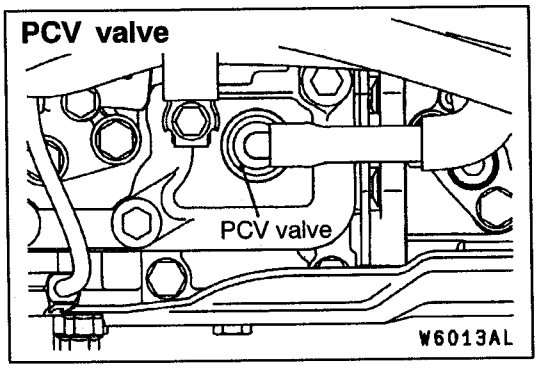

POSITIVE CRANKCASE VENTILATION SYSTEM CHECK

1. Remove the ventilation hose from the PCV valve.
2. Remove the PCV valve from the rocker cover.
3. Reinstall the PCV valve at the ventilation hose.
4. Start the engine and run at idle.

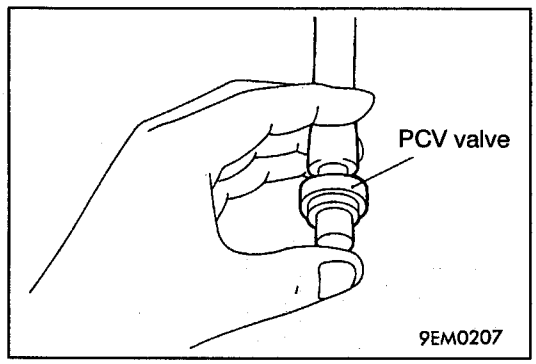

5. Place a finger at the opening of the PCV valve and check that vacuum of the intake manifold is felt.

   NOTE
   At this moment, the plunger in the PCV valve moves back and forth.
6. If vacuum is not felt, clean the PCV valve or replace it.

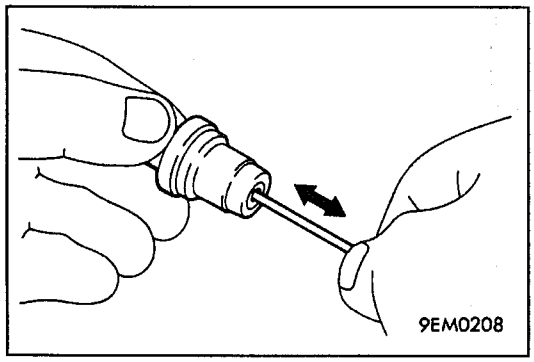

PCV VALVE CHECK

1. Insert a thin rod into the PCV valve from the side shown in the illustration (rocker cover installation side), and move the rod back and forth to check that the plunger moves.
2. If the plunger does not move, there is clogging in the PCV valve. In this case, clean or replace the PCV valve.

EVAPORATIVE EMISSION CONTROL SYSTEM

GENERAL INFORMATION

The evaporative emission control system prevents fuel vapours generated in the fuel tank from escaping into the atmosphere.
Fuel vapours from the fuel tank flow through the fuel tank pressure control valve and vapour pipe/hose to be stored temporarily in the canister. When driving the vehicle, fuel vapours stored in the canister flow through the purge solenoid and purge port and go into the intake manifold to be sent to the combustion chamber.
When the engine coolant temperature is low or when the intake air quantity is small (when the engine is at idle, for example), the engine control unit turns the purge solenoid off to shut off the fuel vapour flow to the intake manifold.
This does not only insure the driveability when the engine is cold or running under low load but also stabilize the emission level.

SYSTEM DIAGRAM

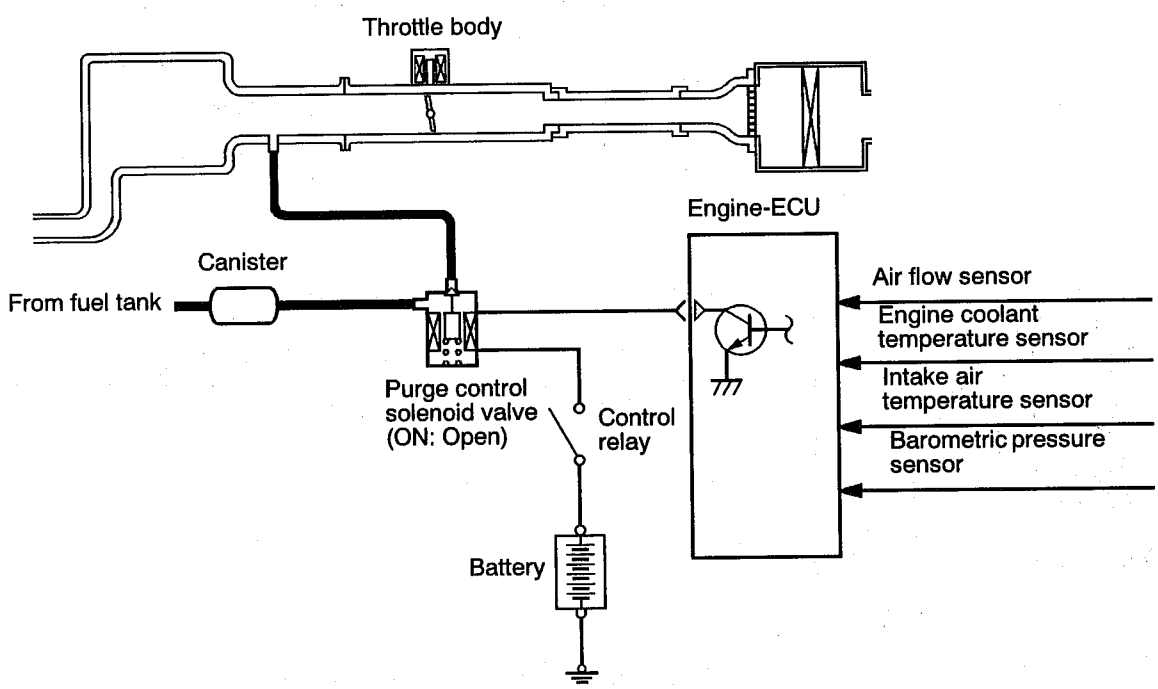

COMPONENT LOCATION

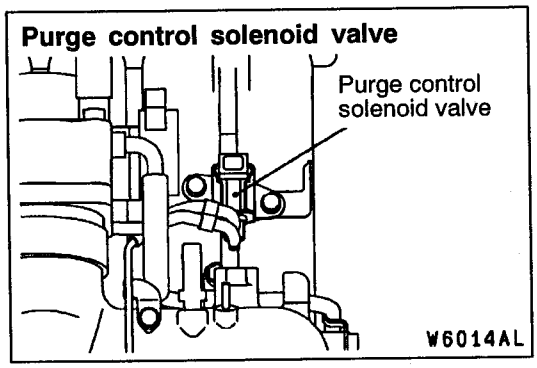

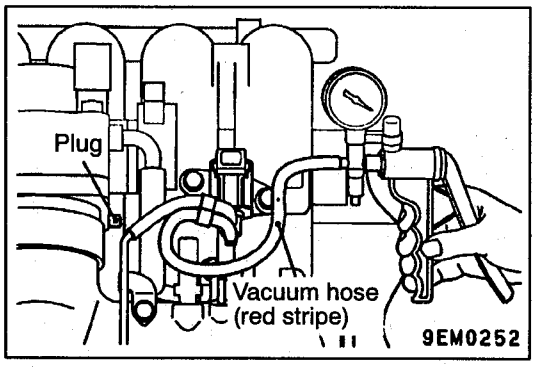

PURGE CONTROL SYSTEM CHECK

1. Disconnect the vacuum hose (red stripe) from the throttle body and connect it to a hand vacuum pump.
2. Plug the nipple from which the vacuum hose was removed.
3. When the engine is cold or hot, apply a vacuum of 53 kPa, and check the condition of the vacuum.

When engine is cold
(Engine coolant temperature: 40°C or less)

Engine condition	Normal condition
At idle	Vacuum is maintained
3,000 r/min	

When engine is hot
(Engine coolant temperature: 80°C or higher)

Engine condition	Normal condition
At idle	Vacuum is maintained
3,000 r/min (fore approximately 3 minutes after the engine is started.)	Vacuum will leak.

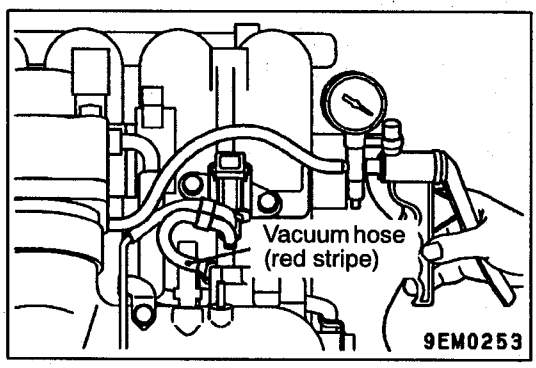

PURGE PORT VACUUM CHECK

1. Disconnect the vacuum hose (red stripe) from the throttle body purge vacuum nipple and connect a hand vacuum pump to the nipple.

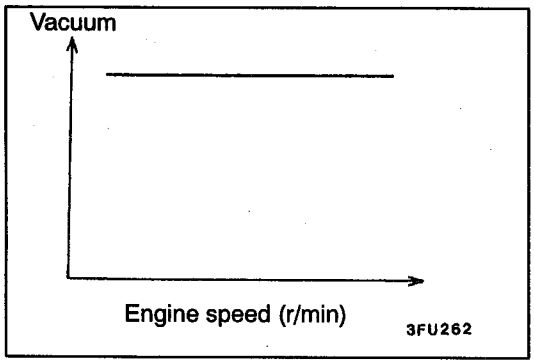

2. Start the engine and check that the vacuum remains fairly constant after racing the engine.

NOTE
If vacuum changes, it is possible that the throttle body purge port may be clogged and require cleaning.

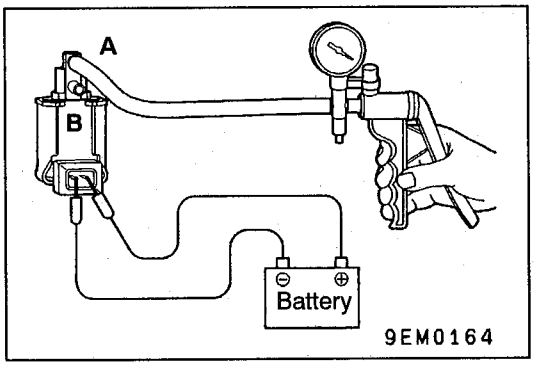

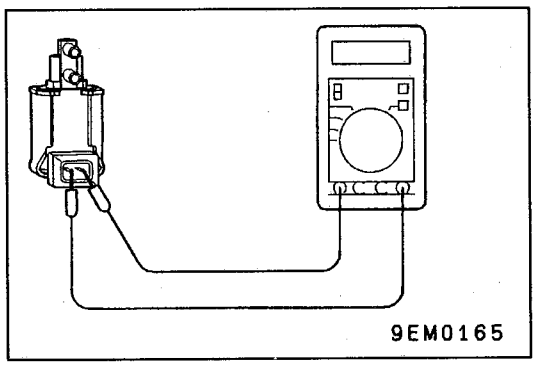

PURGE CONTROL SOLENOID VALVE CHECK

NOTE
When disconnecting the vacuum hose, always make a mark so that it can be reconnected at original position.

1. Disconnect the vacuum hose (black stripe, red stripe) from the solenoid valve.
2. Disconnect the harness connector.
3. Connect a hand vacuum pump to nipple (A) of the solenoid valve (refer to the illustration at left).
4. Check airtightness by applying a vacuum with voltage applied directly from the battery to the purge control solenoid valve and without applying voltage.

Jumper wire	Nipple B	Normal condition
Connected	Open	Vacuum leaks
	Closed	Vacuum maintained
Disconnected	Open	Vacuum maintained

5. Measure the resistance between the terminals of the solenoid valve.

   Standard value: 36 – 44 Ω (at 20°C)

EXHAUST GAS RECIRCULATION (EGR) SYSTEM

GENERAL INFORMATION

The exhaust gas recirculation (EGR) system lowers the nitrogen oxide (NOx) emission level. When the air/fuel mixture combustion temperature is high, a large quantity of nitrogen oxides (NOx) is generated in the combustion chamber. Therefore, this system recirculates part of emission gas from the exhaust port of the cylinder head to the combustion chamber through the intake manifold to decrease the air/fuel mixture combustion temperature, resulting in reduction of NOx.
The EGR flow rate is controlled by the EGR valve so as not to decrease the driveability.

OPERATION

The EGR valve is being closed and dose not recirculate exhaust gases under one of the following conditions. Otherwise, the EGR valve is opened and recirculate exhaust gases.

- The engine coolant temperature is low.
- The engine is at idle.
- The throttle valve is widely opened.

SYSTEM DIAGRAM

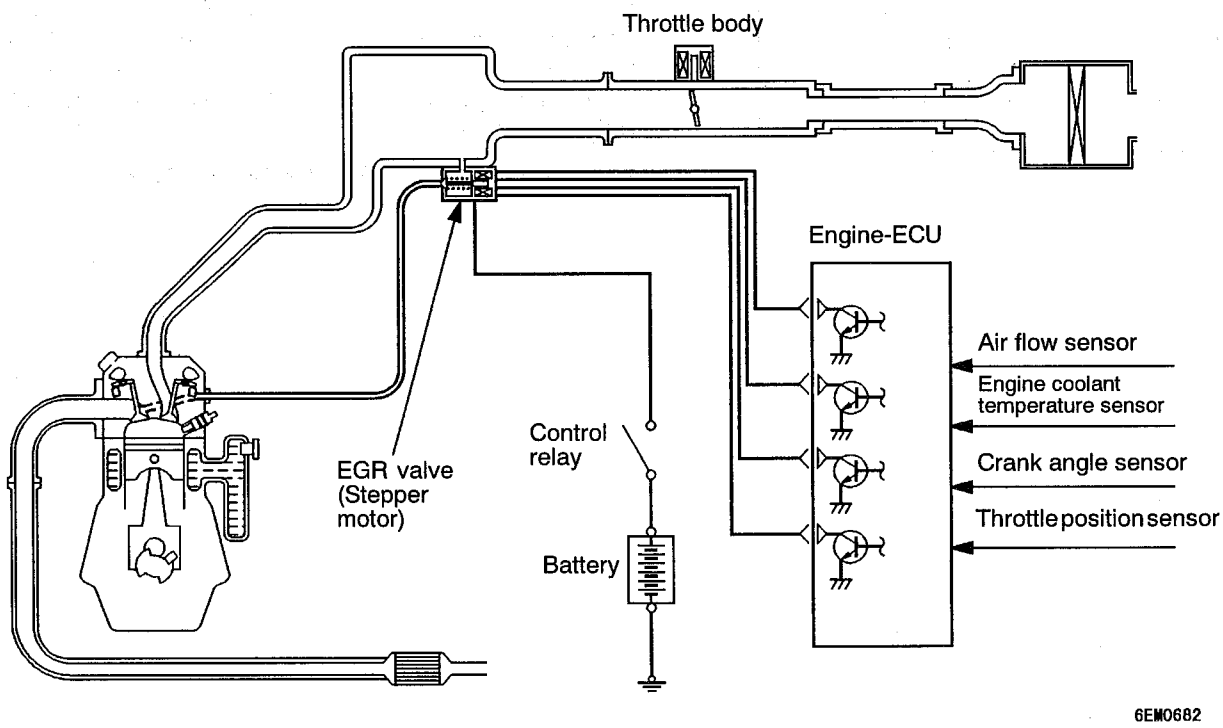

COMPONENT LOCATION

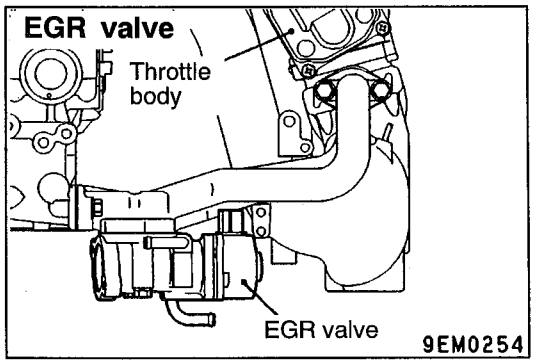

EXHAUST GAS RECIRCULATION (EGR) CONTROL SYSTEM CHECK

Refer to GROUP 13A – Troubleshooting.

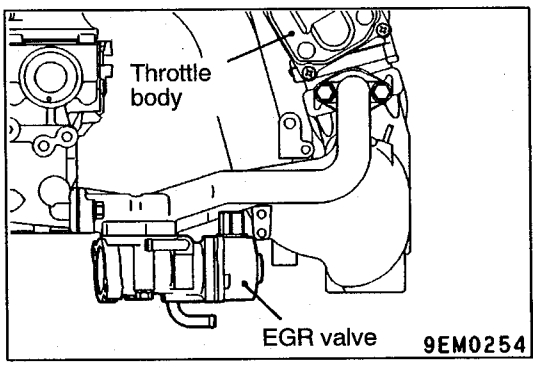

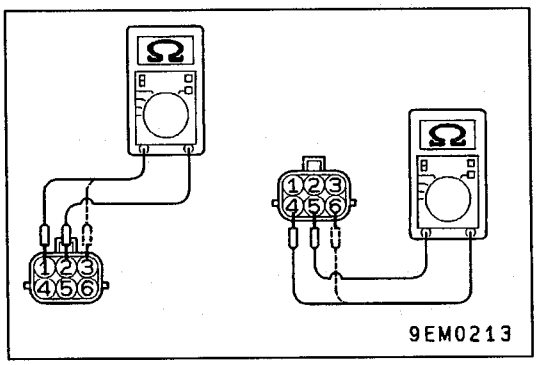

EGR VALVE (STEPPER MOTOR) CHECK

Checking the Operation Sound

1. Check that the operation sound of the stepper motor can be heard from the EGR valve when the ignition switch is turned to ON (without starting the engine).
2. If the operation sound cannot be heard, check the stepper motor drive circuit.

   NOTE
   If the circuit is normal, the cause is probably a malfunction of the stepper motor or of the engine-ECU.

Checking the Coil Resistance

1. Disconnect the EGR valve connector.
2. Measure the resistance between the EGR valve-side connector terminal No.2 and terminal No.1 or terminal No.3.

   Standard value: 10 – 20 Ω (at 20°C)

3. Measure the resistance between the EGR valve-side connector terminal No.5 and terminal No.4 or terminal No.6.

   Standard value: 10 – 20 Ω (at 20°C)

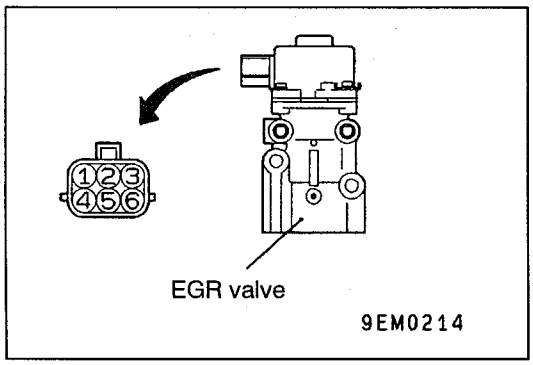

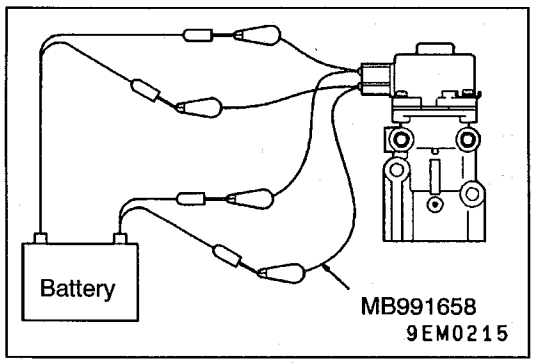

Operation Check

1. Remove the EGR valve.
2. Connect the special tool (test harness set) to the EGR valve-side connector.
3. Connect terminal No.2 and terminal No.5 to the positive (+) terminal of power supply of approximately 6 V.
4. Connect each clip to the negative (–) terminal of power supply in the order given below to test if any vibration occurs (as though the stepper motor is shaking slightly) due to the operation of the stepper motor.
   (1) Connect terminal No.1 and terminal No.4 to the negative (–) terminal of the power supply.
   (2) Connect terminal No.3 and terminal No.4 to the negative (–) terminal of the power supply.
   (3) Connect terminal No.3 and terminal No.6 to the negative (–) terminal of the power supply.
   (4) Connect terminal No.1 and terminal No.6 to the negative (–) terminal of the power supply.
   (5) Connect terminal No.1 and terminal No.4 to the negative (–) terminal of the power supply.
   (6) Repeat the test in the order from (5) to (1).
5. If the results of testing show that the vibration could be felt, the stepper motor is normal.

Cleaning the EGR Valve

Remove the EGR valve, and then check if the EGR valve is stuck and carbon is accumulated in it. If so, use a wire brush to clean the EGR valve.

Caution
Do not use a cleaning solvent. Solvent will penetrate to the motor and malfunction of EGR valve will result.

EGR VALVE

REMOVAL AND INSTALLATION

Pre-removal and Post-installation Operation
- Engine Coolant Draining and Supplying (Refer to GROUP 14 – On-vehicle Service.)
- Engine Cover Removal and Installation

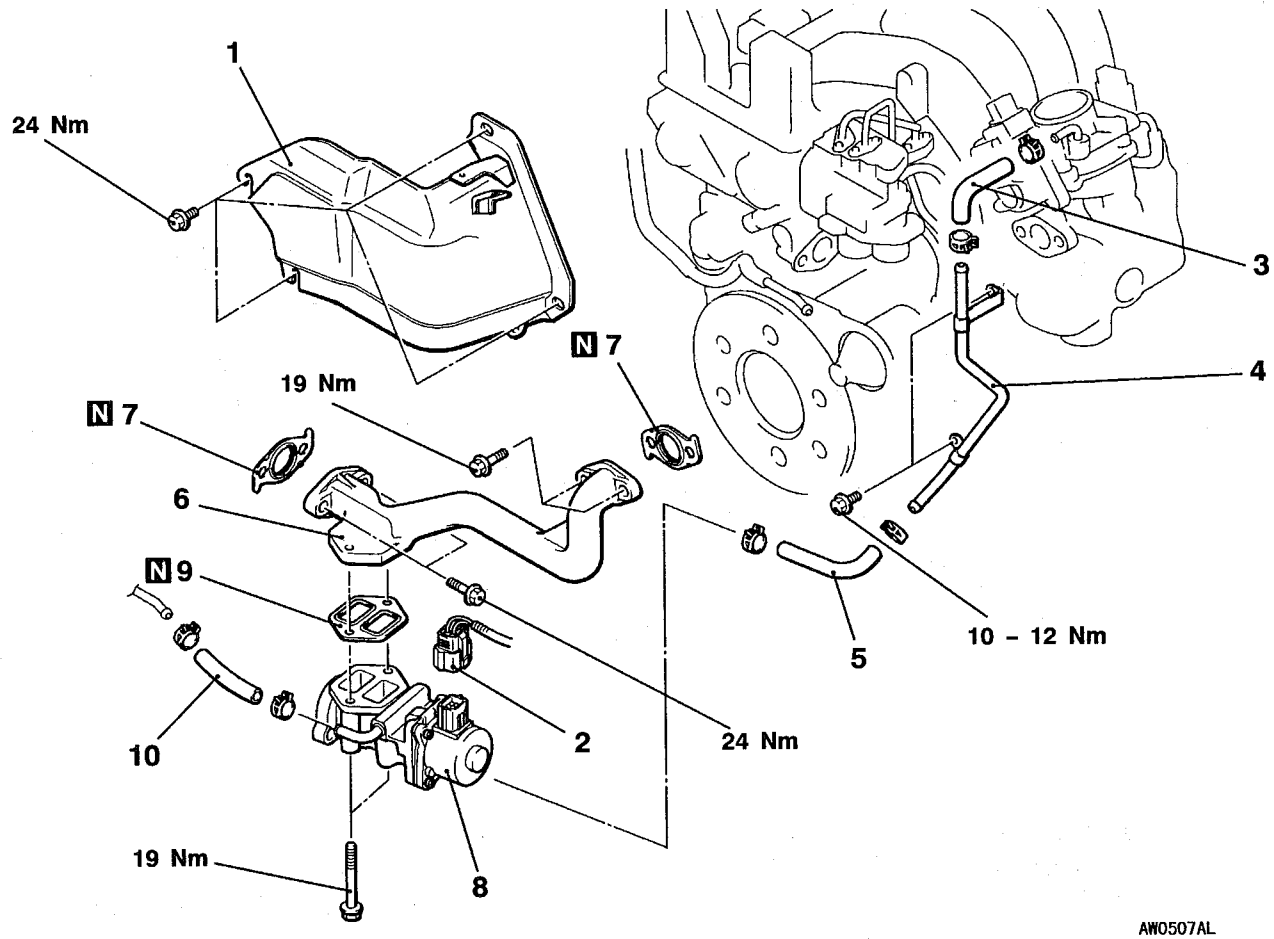

Removal steps

◀A▶ 1. Fuel pump protector
2. EGR valve harness connector connection
3. Water hose
4. Water pipe
5. Water hose
6. EGR valve and support assembly
7. EGR pipe gasket
8. EGR valve
9. EGR valve gasket
10. Water hose

REMOVAL SERVICE POINT

◀A▶ FUEL PUMP PROTECTOR REMOVAL

Lift up the transmission with a jack to create clearance between the engine and front deck, and then remove the fuel pump protector.

CATALYTIC CONVERTER

GENERAL INFORMATION

The three-way catalytic converter, together with the closed loop air-fuel ratio control based on the oxygen sensor signal, oxidizes carbon monoxides (CO) and hydrocarbons (HC) and reduces nitrogen oxides (NOx).

When the mixture is controlled at stoichiometric air-fuel ratio, the three-way catalytic converter provides the highest purification against the three constituents, namely, CO, HC and NOx.

REMOVAL AND INSTALLATION

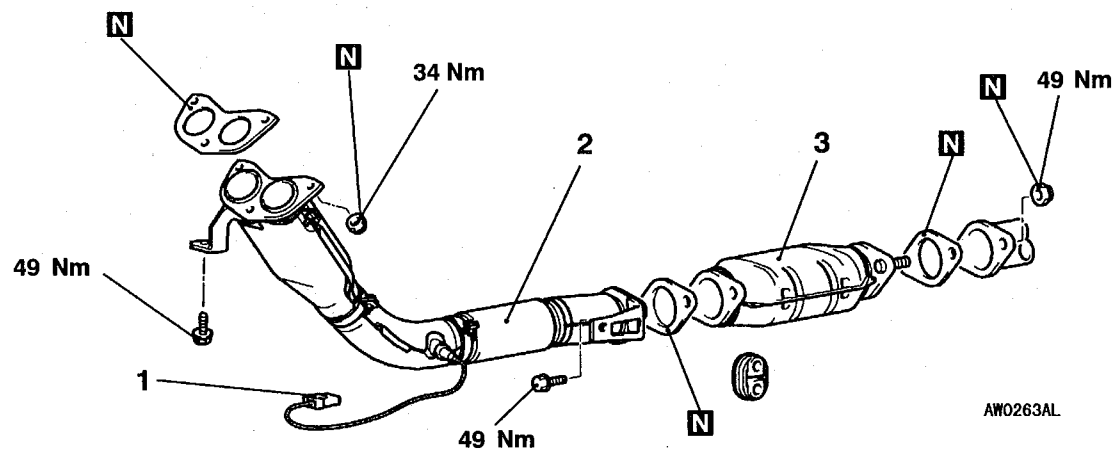

Removal steps

1. Oxygen sensor harness connector connection
2. Front exhaust pipe
3. Catalytic converter

EMISSION CONTROL SYSTEM <MPI>

GENERAL INFORMATION

The emission control system consists of the following subsystems:
- Crankcase emission control system
- Evaporative emission control system
- Exhaust emission control system

Items	Name	Specification
Crankcase emission control system	Positive crankcase ventilation (PCV) valve	Variable flow type (Purpose: HC reduction)
Evaporative emission control system	Canister Purge control solenoid valve*	Equipped ON/OFF type solenoid valve <4G1> (Purpose: HC reduction) Duty cycle type solenoid valve <4G9> (Purpose: HC reduction)
Exhaust emission control system	Air-fuel ratio control device – MPI system*	Oxygen sensor feedback type (Purpose: CO, HC, NOx reduction)
	Exhaust gas recirculation system • EGR valve • EGR control solenoid valve	Equipped Single type ON/OFF type solenoid valve <4G1> (Purpose: NOx reduction) Duty cycle type solenoid valve <4G9> (Purpose: NOx reduction)
	Catalytic converter*	Monolith type (Purpose: CO, HC, NOx reduction)

NOTE
*: Vehicles with catalytic converter

EMISSION CONTROL DEVICE REFERENCE TABLE

Related parts	Crankcase emission control system	Evaporative emission control system	Air/fuel ratio control system	Catalytic converter	Exhaust gas recircula-tion system	Reference page
PCV valve	×					17-24
Purge control solenoid valve		×				17-28
MPI system component		×	×			GROUP 13B <4G1> GROUP 13C <4G9>
Catalytic converter				×		17-34
EGR valve					×	17-32
EGR control solenoid valve					×	17-33

SERVICE SPECIFICATIONS

Items	Standard value
Purge control solenoid valve coil resistance (at 20°C) Ω	36 – 44
EGR control solenoid valve coil resistance (at 20°C) Ω	36 – 44

VACUUM HOSE

VACUUM HOSE PIPING DIAGRAM

<Vehicles with catalytic converter>

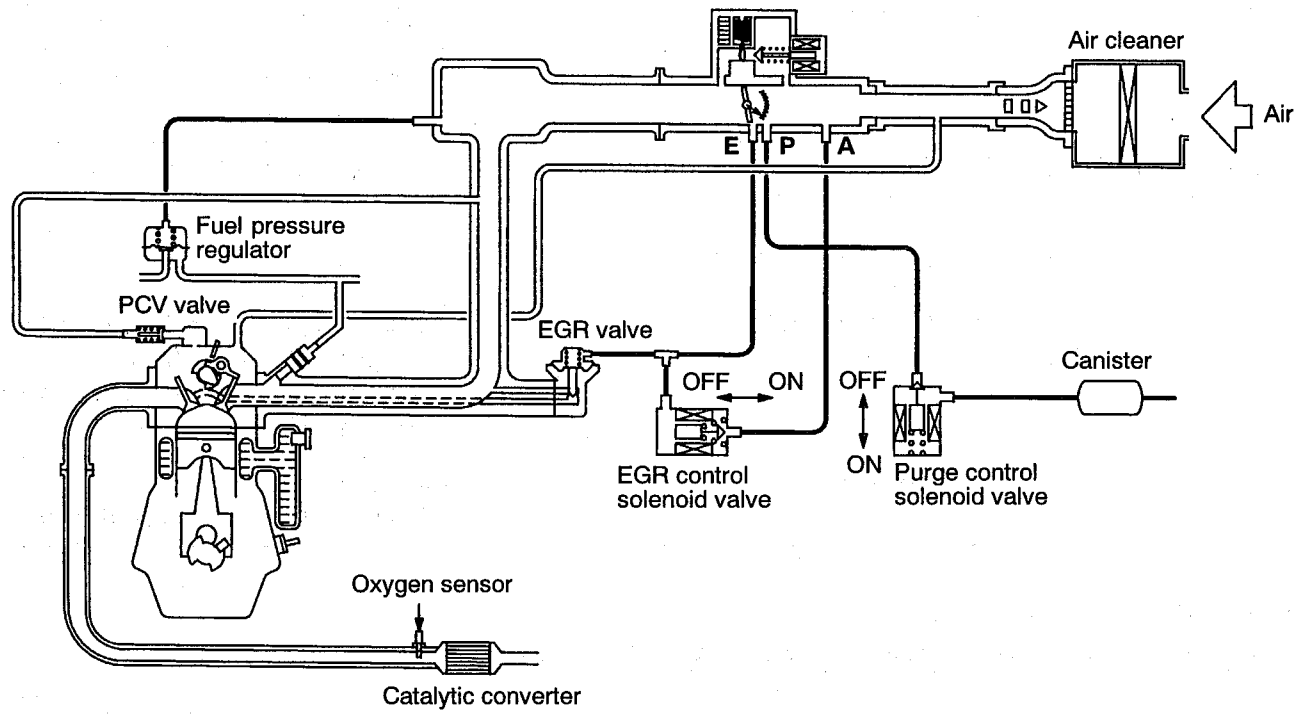

W6010AL

<Vehicles without catalytic converter>

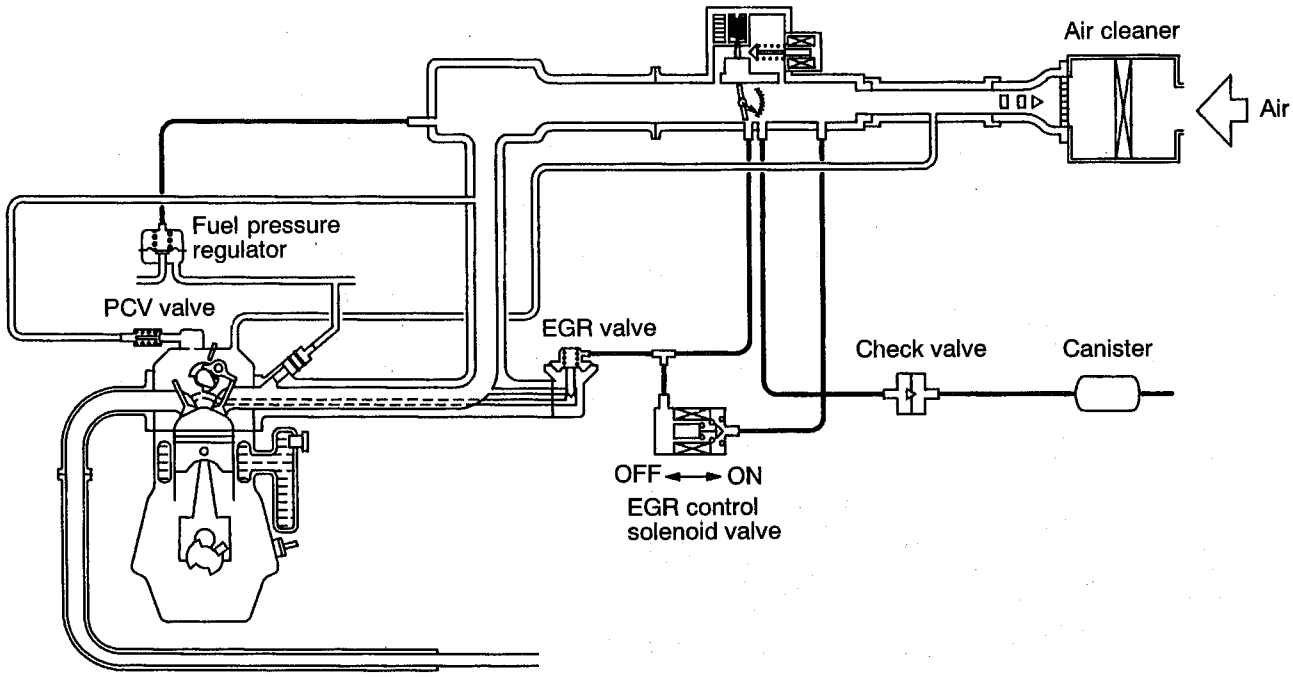

W6009AL

VACUUM CIRCUIT DIAGRAM

<Vehicles with catalytic converter>

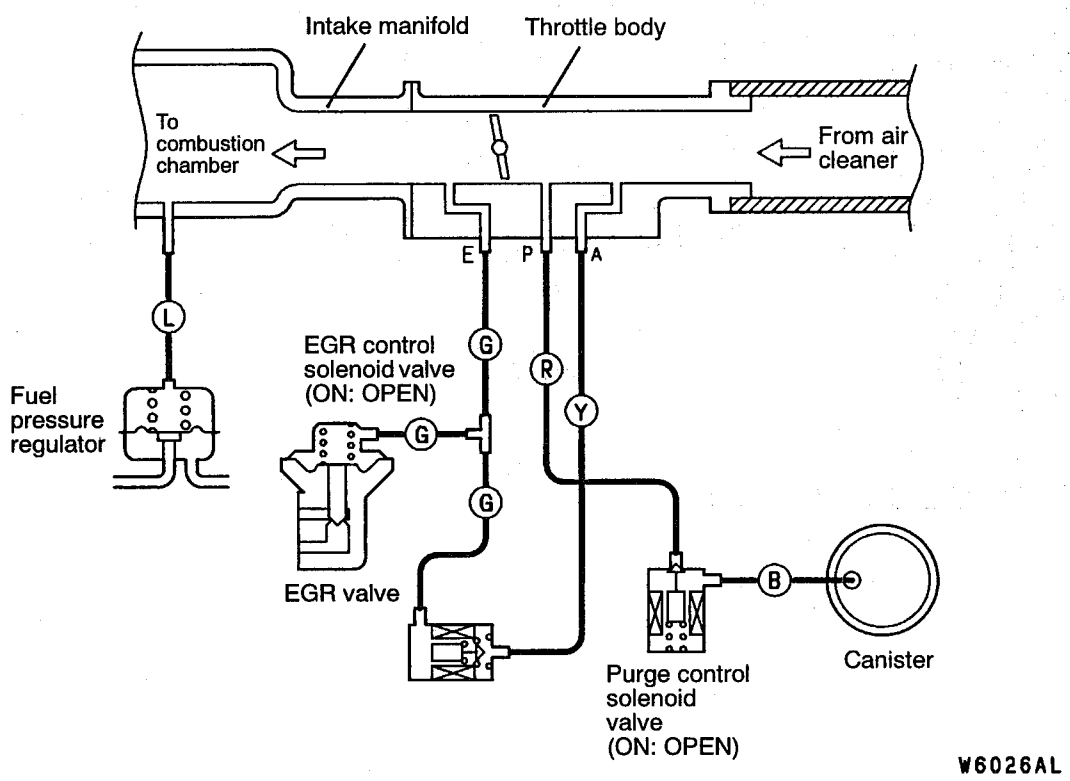

Vacuum hose colour
B: Black
G: Green
L: Light blue
R: Red
Y: Yellow

<Vehicles without catalytic converter>

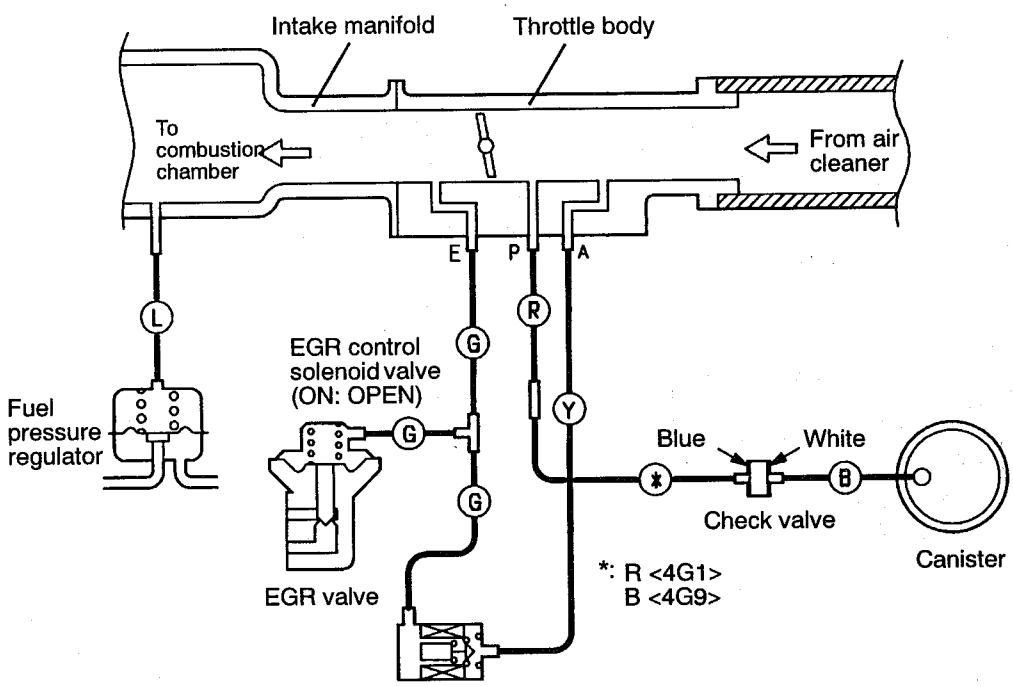

W6027AL

Vacuum hose colour
B: Black
G: Green
L: Light blue
Y: Yellow

VACUUM HOSE CHECK

1. Using the piping diagram as a guide, check to be sure that the vacuum hoses are correctly connected.
2. Check the connection condition of the vacuum hoses, (removed, loose, etc.) and check to be sure that there are no bends or damage.

VACUUM HOSE INSTALLATION

1. When connecting the vacuum hoses, they should be securely inserted onto the nipples.
2. Connect the hoses correctly, using the vacuum hose piping diagram as a guide.

CRANKCASE EMISSION CONTROL SYSTEM

GENERAL INFORMATION

Refer to P.17-9.

SYSTEM DIAGRAM

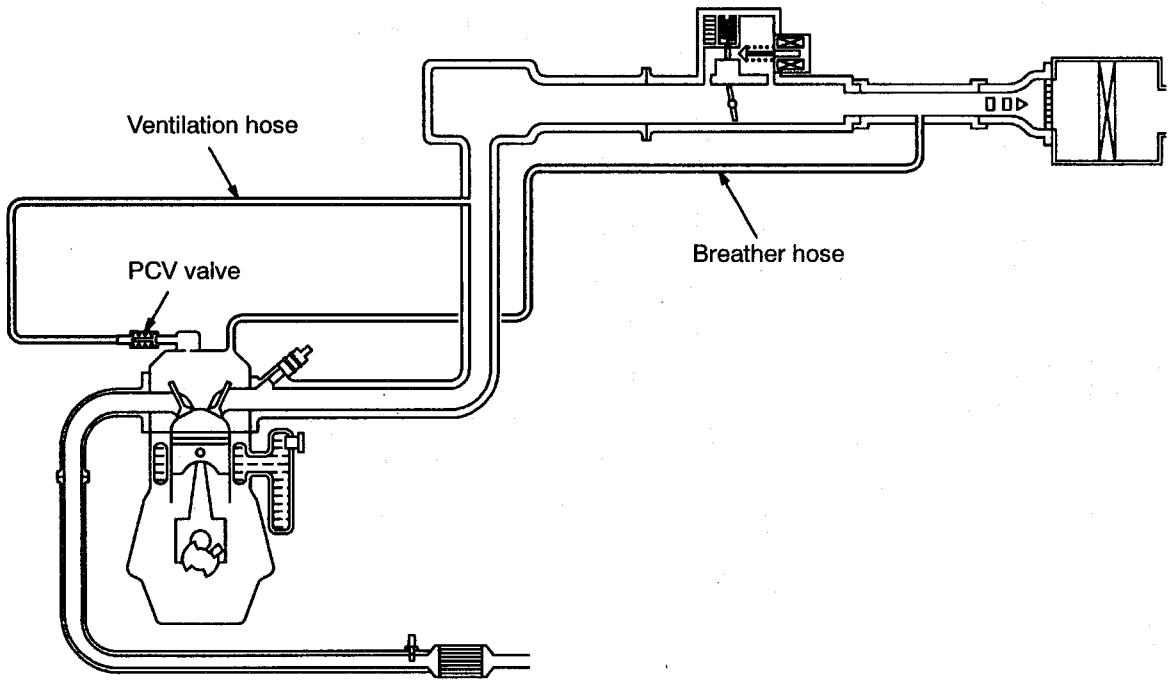

W6025AE

COMPONENT LOCATION

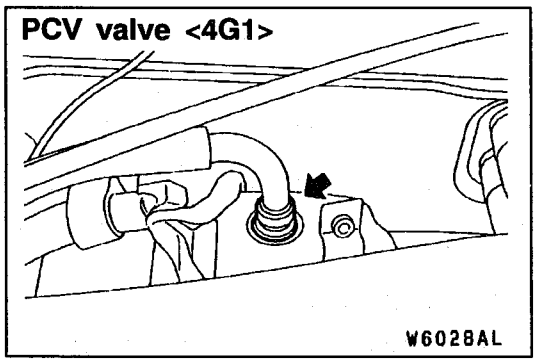

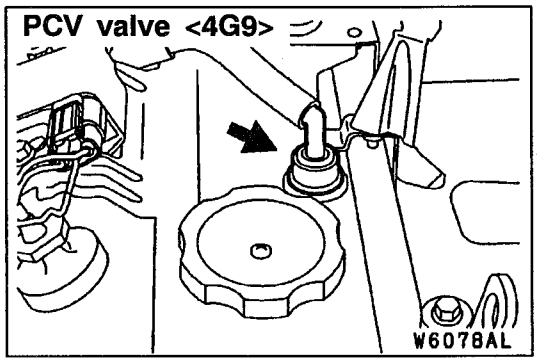

POSITIVE CRANKCASE VENTILATION SYSTEM CHECK

Refer to P.17-10.

PCV VALVE CHECK

Refer to P.17-10.

EVAPORATIVE EMISSION CONTROL SYSTEM <Vehicles with catalytic converter>

GENERAL INFORMATION

The evaporative emission control system prevents fuel vapours generated in the fuel tank from escaping into the atmosphere.
Fuel vapours from the fuel tank flow through the fuel tank pressure control valve and vapour pipe/hose to be stored temporarily in the canister.
When driving the vehicle, fuel vapours stored in the canister flow through the purge solenoid and purge port and go into the intake manifold to be sent to the combustion chamber.
When the engine coolant temperature is low or when the intake air quantity is small (when the engine is at idle, for example), the engine control unit turns the purge solenoid off to shut off the fuel vapour flow to the intake manifold.
This does not only insure the driveability when the engine is cold or running under low load but also stabilize the emission level.

SYSTEM DIAGRAM

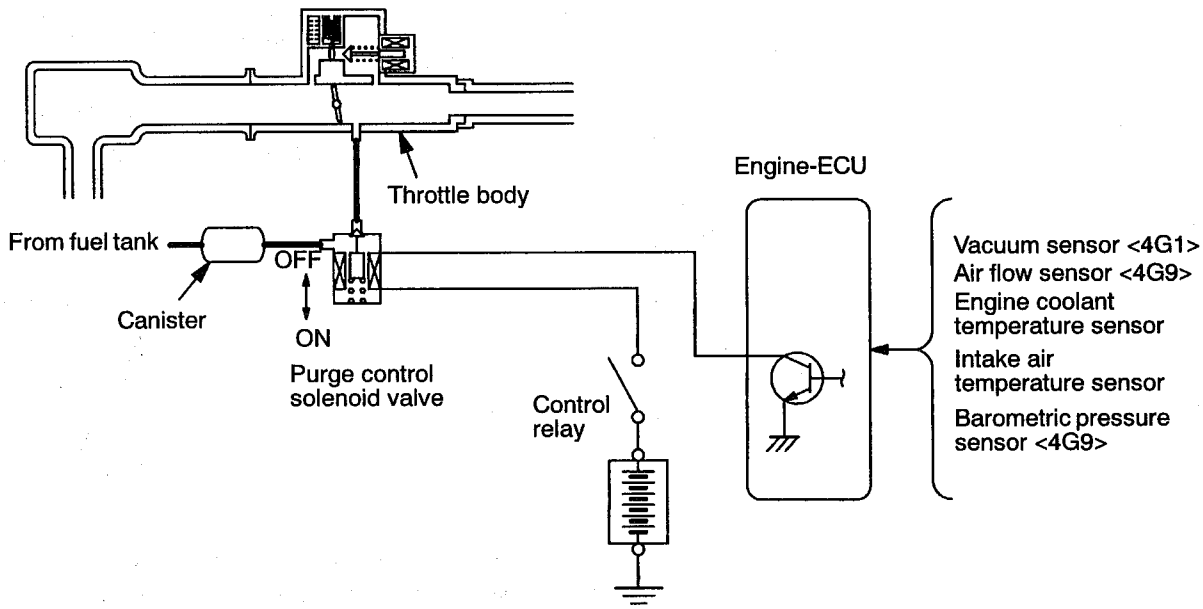

COMPONENT LOCATION

Purge control solenoid valve <4G1>

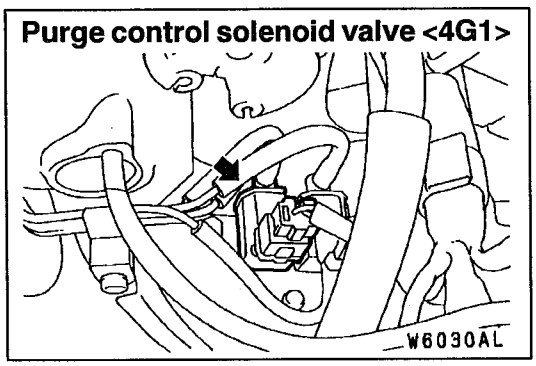

Purge control solenoid valve <4G9>

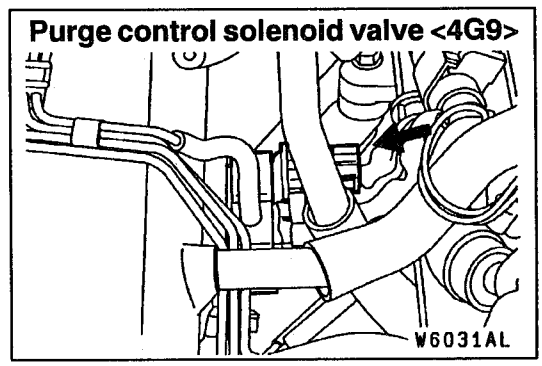

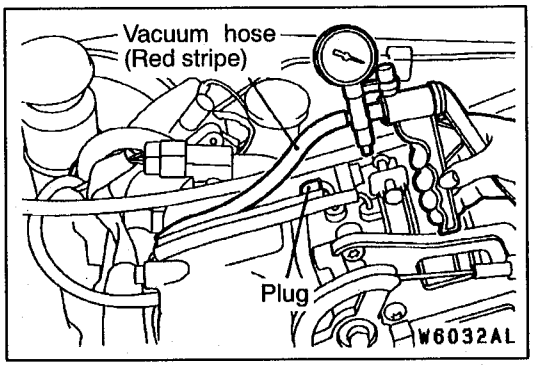

PURGE CONTROL SYSTEM CHECK <4G1>

1. Disconnect the vacuum hose (red stripe) from the throttle body and connect it to a hand vacuum pump.
2. Plug the nipple from which the vacuum hose was removed.
3. When the engine is cold or hot, apply a vacuum while the engine is idling, and check the condition of the engine and the vacuum.

When engine is cold
(Engine coolant temperature: 40°C or less)

Vacuum	Engine condition	Normal condition
53 kPa	3,000 r/min	Vacuum is maintained

When engine is hot
(Engine coolant temperature: 80°C or higher)

Vacuum	Engine condition	Normal condition
53 kPa	At idle	Vacuum is maintained
	3,000 r/min	Vacuum will leak for approximately 3 minutes after the engine is started. After 3 minutes have passed, the vacuum will be maintained momentarily, after which it will again leak.*

NOTE
*: The vacuum will leak continuously if the atmospheric pressure is approximately 77 kPa or less, or the temperature of the intake air is approximately 50°C or higher.

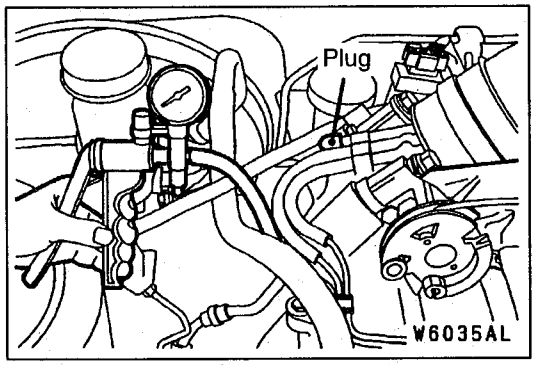

PURGE CONTROL SYSTEM CHECK <4G9>

1. Disconnect the vacuum hose (red stripe) from the throttle body and connect it to a hand vacuum pump.
2. Plug the nipple from which the vacuum hose was removed.
3. When the engine is cold or hot, apply a vacuum of 53 kPa, and check the condition of the vacuum.

When engine is cold
(Engine coolant temperature: 40°C or less)

Engine condition	Normal condition
At idle	Vacuum is maintained
3,000 r/min	

When engine is hot
(Engine coolant temperature: 80°C or higher)

Engine condition	Normal condition
At idle	Vacuum is maintained
3,000 r/min (fore approximately 3 minutes after the engine is started.)	Vacuum will leak.

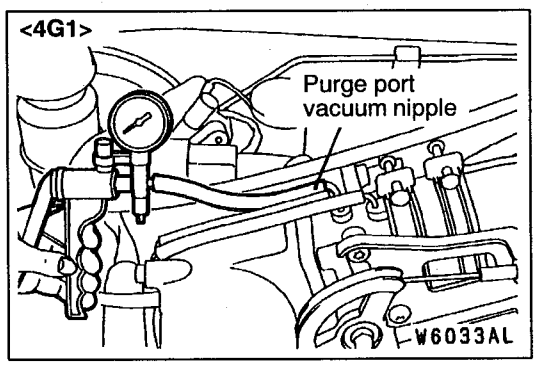

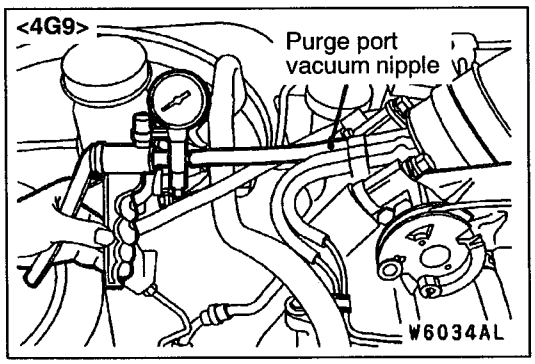

PURGE PORT VACUUM CHECK

1. Disconnect the vacuum hose (red stripe) from the throttle body purge vacuum nipple and connect a hand vacuum pump to the nipple.

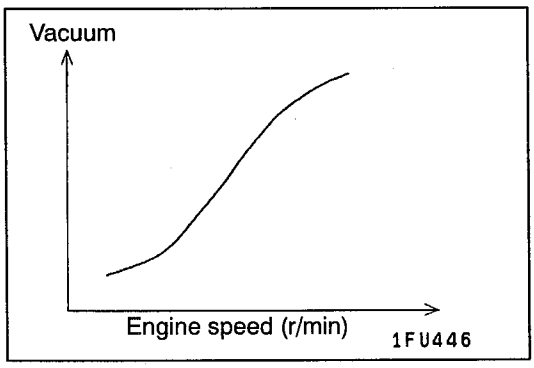

2. Start the engine and check that, after raising the engine speed by racing the engine, purge vacuum raises according to engine speed.

NOTE
If there is a problem with the change in vacuum, the throttle body purge port may be clogged and require cleaning.

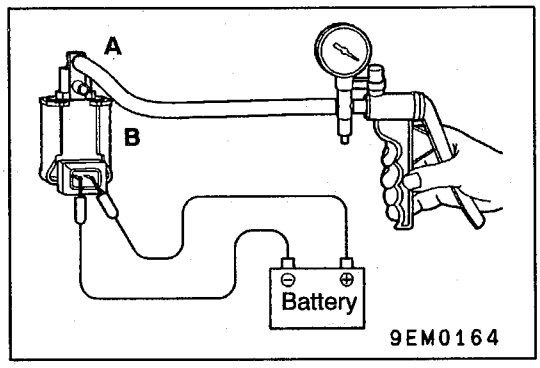

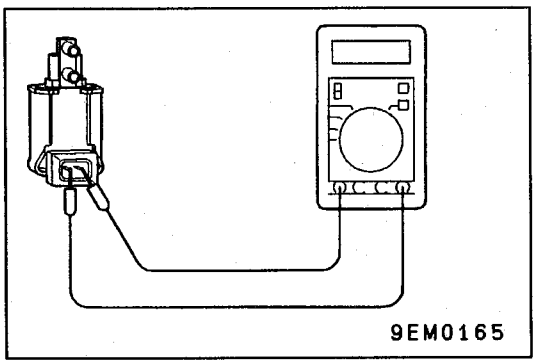

PURGE CONTROL SOLENOID VALVE CHECK

NOTE
When disconnecting the vacuum hose, always make a mark so that it can be reconnected at original position.

1. Disconnect the vacuum hose (black, red stripe) from the solenoid valve.
2. Disconnect the harness connector.
3. Connect a hand vacuum pump to nipple (A) of the solenoid valve (refer to the illustration at left).
4. Check airtightness by applying a vacuum with voltage applied directly from the battery to the purge control solenoid valve and without applying voltage.

Battery voltage	Normal condition
Applied	Vacuum leaks
Not applied	Vacuum maintained

5. Measure the resistance between the terminals of the solenoid valve.

   Standard value: 36 – 44 Ω (at 20°C)

EVAPORATIVE EMISSION CONTROL SYSTEM <Vehicles without catalytic converter>

GENERAL INFORMATION

The evaporative emission control system prevents fuel vapours generated in the fuel tank from escaping into the atmosphere.
Fuel vapors from the fuel tank flow through the fuel tank pressure control valve and vapor pipe/hose to be stored temporarily in the canister. When driving the vehicle, fuel vapors stored in the canister go into the intake manifold to be sent to the combustion chamber.

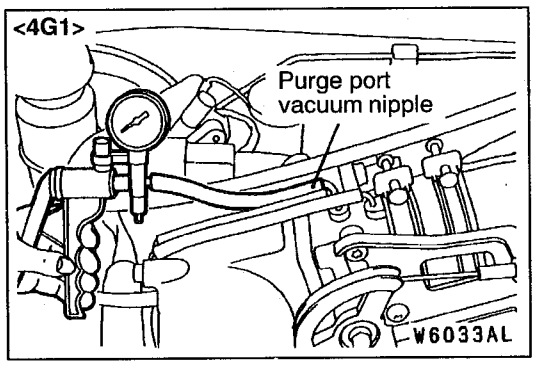

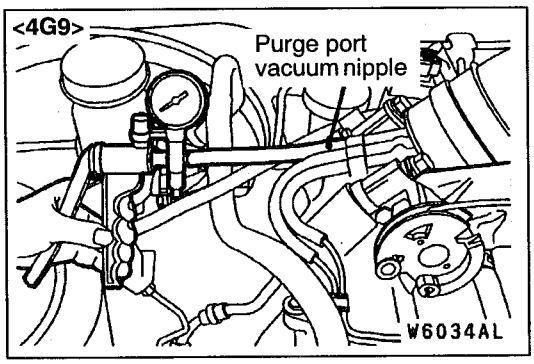

PURGE PORT VACUUM CHECK

1. Disconnect the vacuum hose (red) from the throttle body purge vacuum nipple and connect a hand vacuum pump to the nipple.

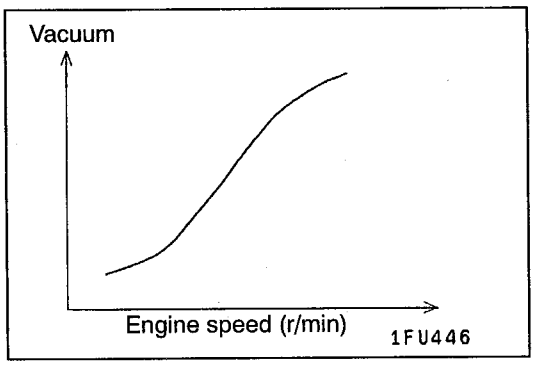

2. Start the engine and check that, after raising the engine speed by racing the engine, purge vacuum raises according to engine speed.

   NOTE
   If there is a problem with the change in vacuum, the throttle body purge port may be clogged and require cleaning.

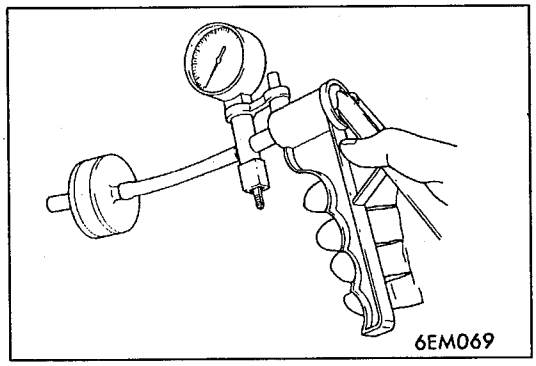

CHECK VALVE CHECK

Connect a hand vacuum pump to the check valve, apply negative pressure and check the airtightness.

Connected nipple color	Normal condition
Blue	Negative pressure leaks
White	Negative pressure is maintained

EXHAUST GAS RECIRCULATION (EGR) SYSTEM

GENERAL INFORMATION

The exhaust gas recirculation (EGR) system lowers the nitrogen oxide (NOx) emission level. When the air/fuel mixture combustion temperature is high, a large quantity of nitrogen oxides (NOx) is generated in the combustion chamber. Therefore, this system recirculates part of emission gas from the exhaust port of the cylinder head to the combustion chamber through the intake manifold to decrease the air/fuel mixture combustion temperature, resulting in reduction of NOx.
The EGR flow rate is controlled by the EGR valve so as not to decrease the driveability.

OPERATION

The EGR valve is being closed and does not recirculate exhaust gases under one of the following conditions. Otherwise, the EGR valve is opened and recirculates exhaust gases.

- The engine coolant temperature is low.
- The engine is at idle.
- The throttle valve is widely opened.

SYSTEM DIAGRAM

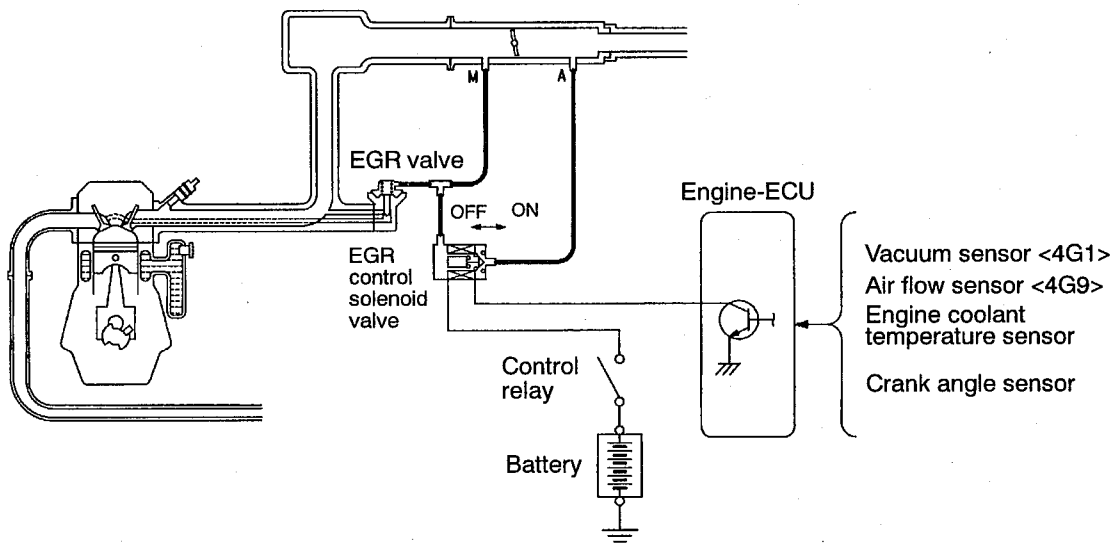

COMPONENT LOCATION

EGR control solenoid valve <4G1>

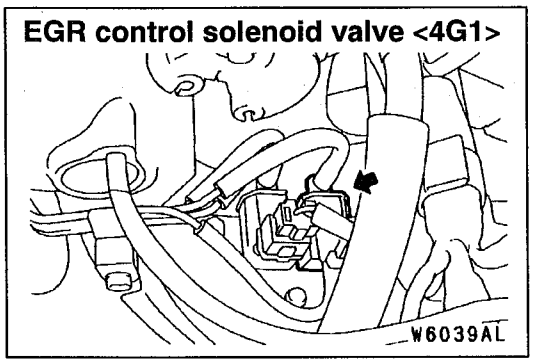

EGR valve <4G1>

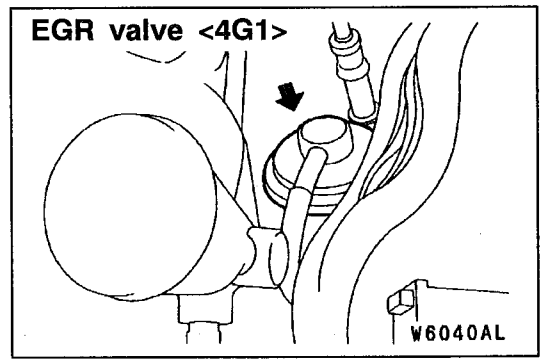

EGR control solenoid valve <4G9>

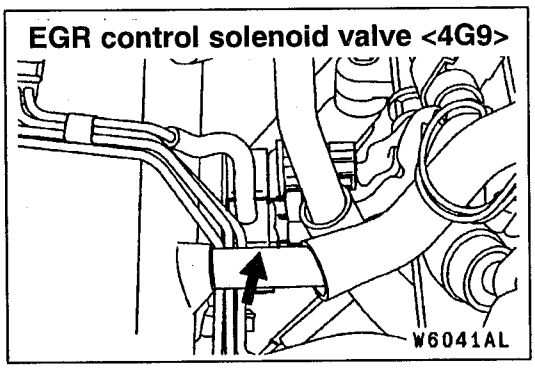

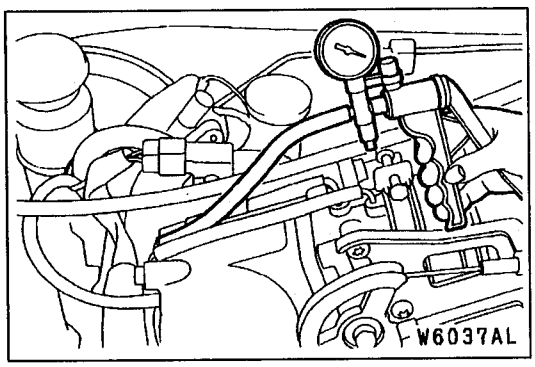

EGR valve <4G9>

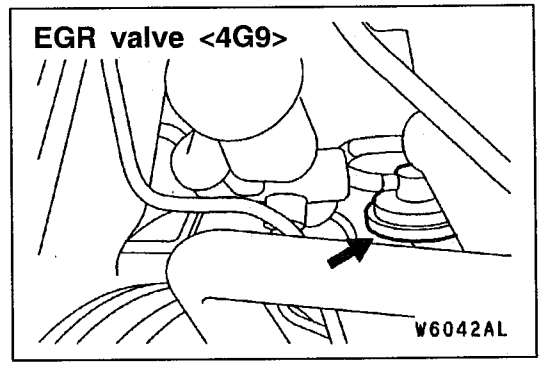

EXHAUST GAS RECIRCULATION (EGR) CONTROL SYSTEM CHECK <4G1>

1. Disconnect the vacuum hose (green stripe) from the throttle body, and connect a hand vacuum pump to the vacuum hose.
2. Plug the nipple from which the vacuum hose was removed.
3. When the engine is cold and hot, apply a vacuum while the engine is idling, and check the condition of the engine and the vacuum.

When engine is cold
(Engine coolant temperature: 40°C or less)

Hand vacuum pump	Normal engine condition	Normal vacuum condition
Vacuum is applied	No change	Vacuum leaks

When engine is hot
(Engine coolant temperature: 80°C or higher)

Hand vacuum pump	Normal engine condition	Normal vacuum condition
2.7 kPa	No change	Vacuum is maintained
29 kPa	Idling becomes slightly unstable or engine stalls.	Vacuum is maintained

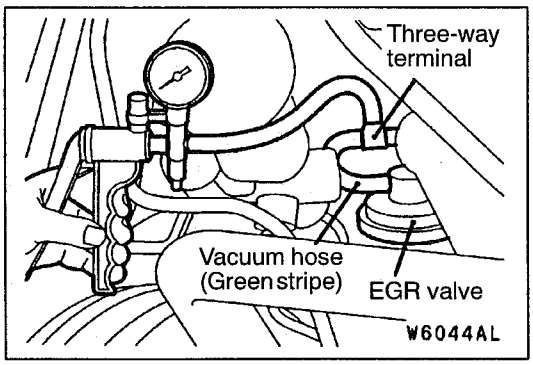

EXHAUST GAS RECIRCULATION (EGR) CONTROL SYSTEM CHECK <4G9>

1. Disconnect the vacuum hose (green stripe) from the EGR valve, and then connect a hand vacuum pump via the three-way terminal.
2. When the engine is hot or cold, check the condition of vacuum by racing the engine.

When engine is cold
(Engine coolant temperature: 20°C or less)

Throttle valve	Normal vacuum condition
Open quickly	No vacuum will generate (the same as barometric pressure.)

When engine is hot
(Engine coolant temperature: 80°C or higher)

Throttle valve	Normal vacuum condition
Open quickly	It will momentarily rise over 13 kPa

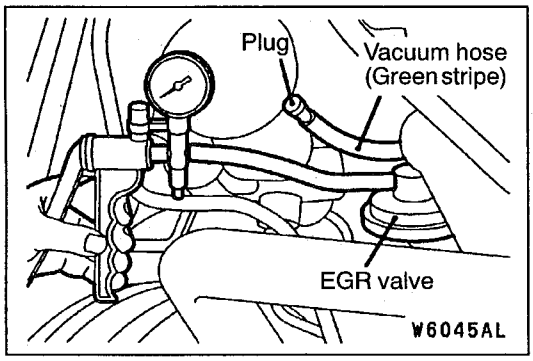

3. Disconnect the three-way terminal.
4. Connect the hand vacuum pump to the EGR valve.
5. Check whether the engine stalls or the idling is unstable when a vacuum of 30 kPa or higher is applied during idling.

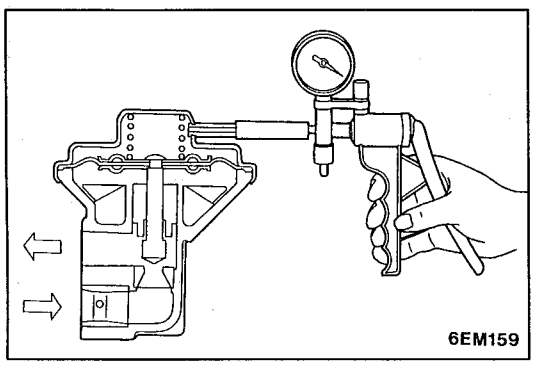

EGR VALVE CHECK

1. Remove the EGR valve and inspect for sticking, carbon deposits, etc. If found, clean with a suitable solvent so that the valve seats correctly.
2. Connect a hand vacuum pump to the EGR valve.
3. Apply 67 kPa of vacuum, and check that the vacuum is maintained.
4. Apply a vacuum and check the passage of air by blowing through one side of the EGR passage.

Vacuum	Passage of air
2.7 kPa or less	Air is not blown out
29 kPa or more	Air is blown out

5. Replace the gasket, and tighten to the specified torque.

Tightening torque: 22 Nm

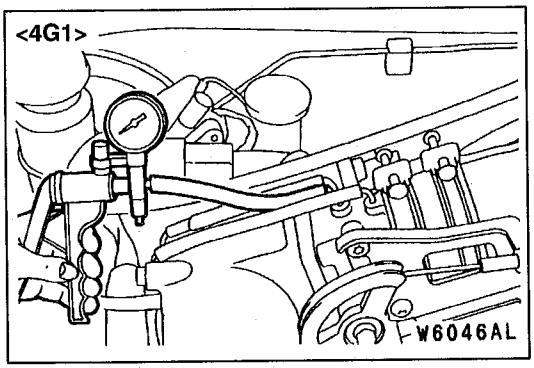

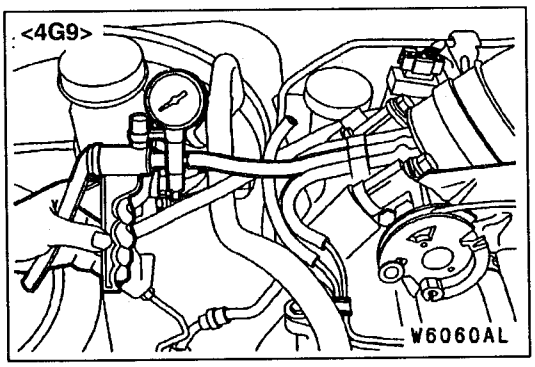

EGR PORT VACUUM CHECK

1. Disconnect the vacuum hose (Green) from the throttle body EGR vacuum nipple and connect a hand vacuum pump to the nipple.

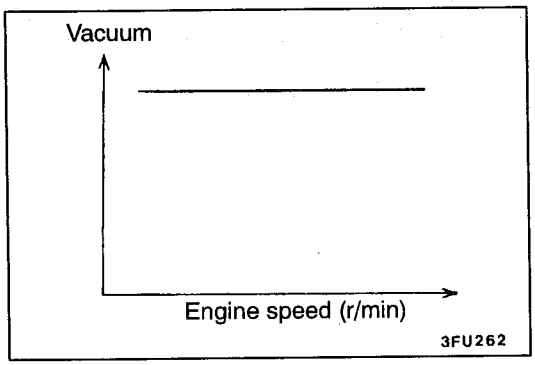

2. Start the engine and check that the vacuum remains fairly constant after racing the engine.

   NOTE
   If vacuum changes, it is possible that the throttle body EGR port may be clogged and require cleaning.

EGR CONTROL SOLENOID VALVE CHECK

NOTE
When disconnecting the vacuum hose, always make a mark so that it can be reconnected at original position.

1. Disconnect the vacuum hose (yellow stripe, green stripe) from the solenoid valve.
2. Disconnect the harness connector.

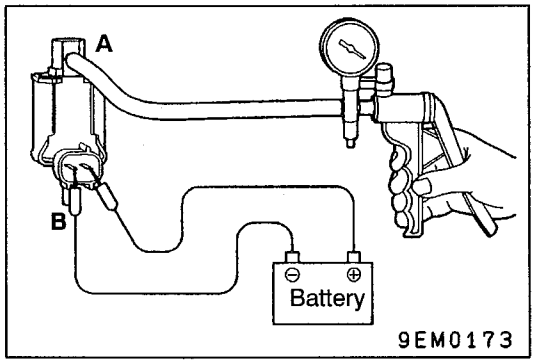

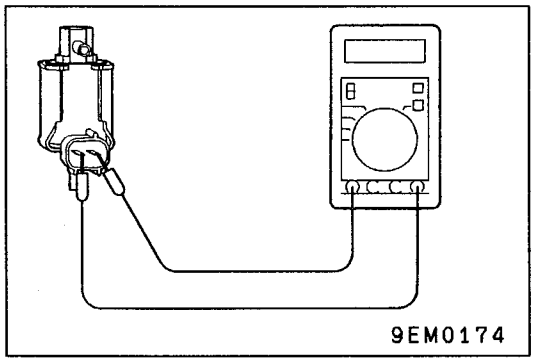

3. Connect a hand vacuum pump to the nipple (A) of the solenoid valve (refer to the illustration at left).
4. Check airtightness by applying a vacuum with voltage applied directly from the battery to the EGR control solenoid valve and without applying voltage.

Battery voltage	Normal condition
Not applied	Vacuum maintained
Applied	Vacuum leaks

5. Measure the resistance between the terminals of the solenoid valve.

   Standard value: 36 – 44 Ω (at 20°C)

CATALYTIC CONVERTER

REMOVAL AND INSTALLATION

Refer to P.17-18.